Workshop IX

Capstone Project: Remote Control PCB

© 2024 Open Project Space, Institute of Electrical and Electronics Engineers at the University of California, Irvine. All Rights Reserved.

Before Continuing, Do This:

- It is highly recommended that you complete Project 8: 555 Blinker PCB before attempting this project
  - For a complete walkthrough of project 8, watch "[2023-2024] OPS Workshop 4: PCB Design with KiCad" (YouTube)
- Make sure you have the latest version of KiCad installed
- Download **ESP32_OPS_KICAD_FILES.zip** under Canvas Assignment titled "Capstone Project: PCB Design"

SECTION I

Getting Started

Workshop Objectives

- Remote Control PCB Objectives:
  - Control a Rover wirelessly through a Joystick input with the ESP32
  - Uses Two LEDs: One red and one green to indicate the rover's movement status
- We will be demonstrating the **schematic design process** in KiCAD and tips for the **PCB design process**
- The completed and assembled schematic will look something like this:

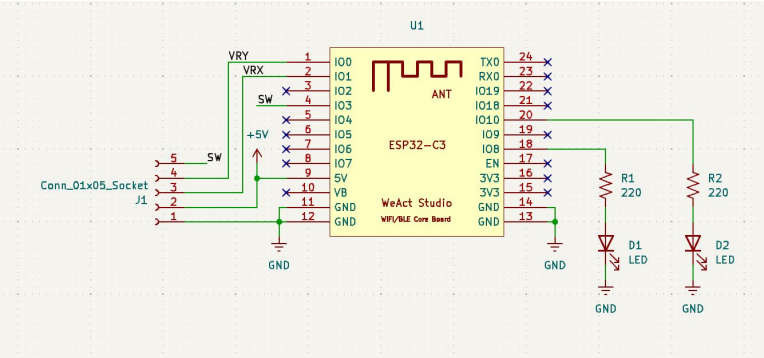

Remote Control PCB

Creating a New Project

1. **Open KiCad** and either press **Ctrl+N (⌘ + N for Mac)** or go to the context menu and select **File→Create New Project**
2. Name your project **“capstone_firstname_lastname.kicad_pro”**
3. You will see something like this:

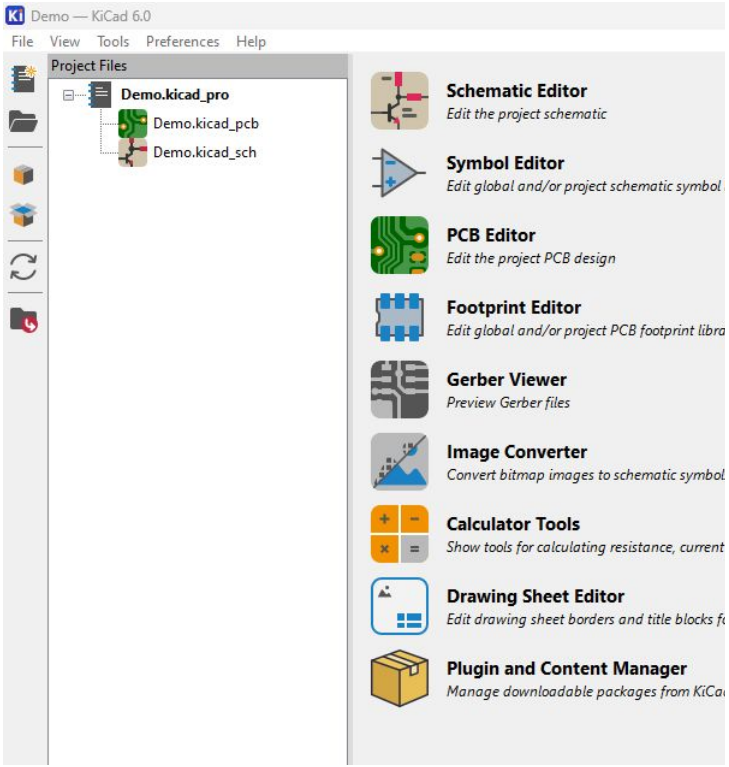

Adding Symbol/Footprint Libraries

- We will be using a symbol and footprint for the ESP32 that is not included in KiCad, so we will have to add it ourselves

1. Unzip the folder **ESP32_OPS_KICAD_FILES.zip**, then drag it into your project folder
2. Go to Preferences -> Manage Symbol Libraries -> Project Specific Libraries -> Click the Folder Icon -> Select “ESP32_OPS.kicad_sym” from your project folder -> Click OK
3. Go to Preferences -> Manage Footprint Libraries -> Project Specific Libraries -> Click the Folder Icon Select “ESP32_OPS.pretty” folder from your project folder -> Click OK

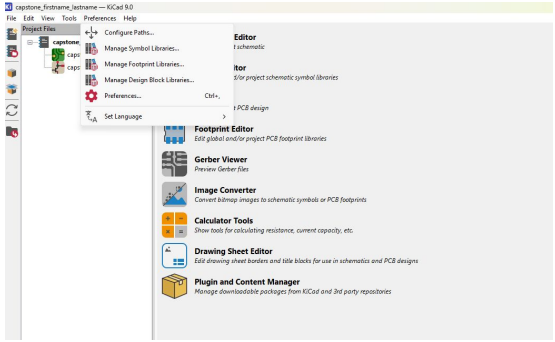

SECTION II

Schematic Capture

Schematic Design Process

1. **Create** and **place all symbols**
2. **Assign footprints** to symbols
3. **Wire the symbols** as desired
4. **Flag all pins that should not be connected**
5. **Label pins and nets** as needed

Adding Symbols

- Press **A** or navigate to the right toolbar and **click the “triangle”** op amp symbol
- Search in the box for symbols you need:
  1. 1x WeAct-ESP32-C3Fx4-CoreBoard (from the ESP_OPS Symbol Library)
  2. 2x R_US
  3. 2x LED
  4. 1x Conn_01x05_Socket (To connect the Joystick to the ESP32)

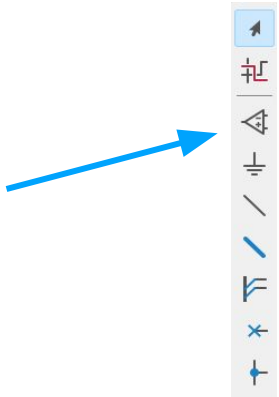

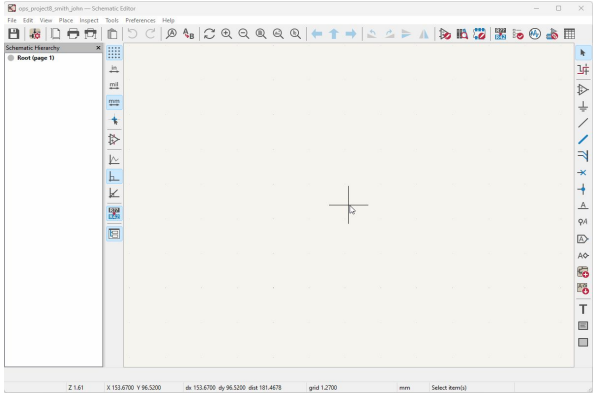

Assigning Component Footprints

- For the ESP32, we will import the **ESP32_OPS** Library for **WeAct-ESP32-C3Fx4-CoreBoard**
- For the resistors, we will search the **Resistor_THT** library for **R_Axial_DIN0207_L6.3mm_D2.5mm_P7.62mm_Horizontal**
- For the LED, we will search the **LED_THT** library for **LED_D3.0mm**
- We are going to use the **Connector_PinSocket_2.54mm** library to find **PinSocket_1x05_P2.54mm_Vertical**

Schematic Verification

Before our Schematic is finished, we have 2 last steps we need to do:

1. **Electronics rules check**
    - Make sure to **run the Electronics Rules Check** (**ERC**) under **Inspect**
    - The only error you should receive is “**Error: Input Power pin not driven by any Output Power pins.**” as we have not connected a specific Input Power Pin
2. **Annotate the schematic**
    - We want to annotate our schematic as well by selecting **Annotate** under **Tools**

SECTION III

PCB Design

PCB Design Process

1. **Define board outline**
2. **Place components**
3. **Place traces** and **vias**
4. **Add any necessary fills**

Exporting the Schematic to the PCB

1. To add the footprints to the PCB editor, press **F8** or click this icon on the top toolbar
2. Once the dialog pops up: Press **Update PCB**, watch for errors, then press **Close**

   You will see some footprints appear on the PCB like this:

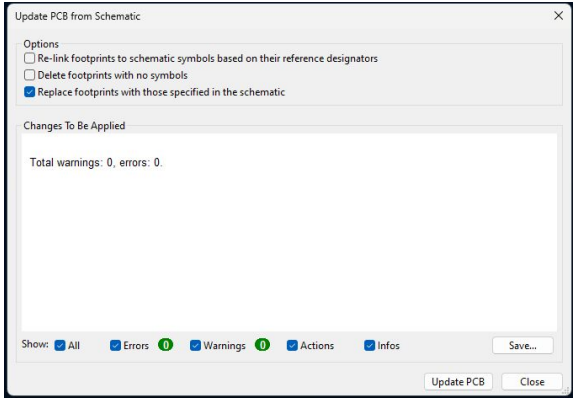

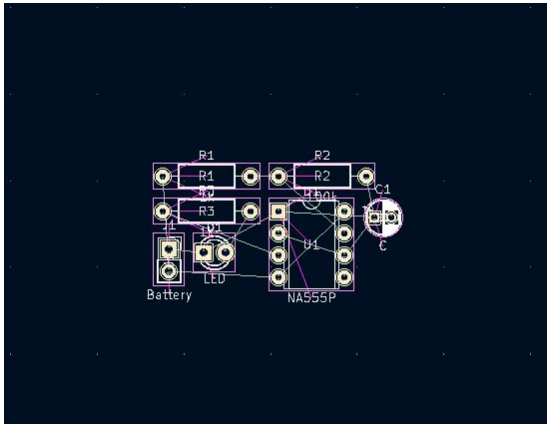

Creating Board Outline

1. Select the **Edge.Cuts** layer by clicking on it; it will be gray once you highlight it
2. **Create a closed graphical shape** in the Edge.Cuts layer (usually a rectangle)
   a. Layer represents the outline/cut-out of the board (any closed shape of any size will do)
   b. It is recommended you create a rectangle or other simple shape:

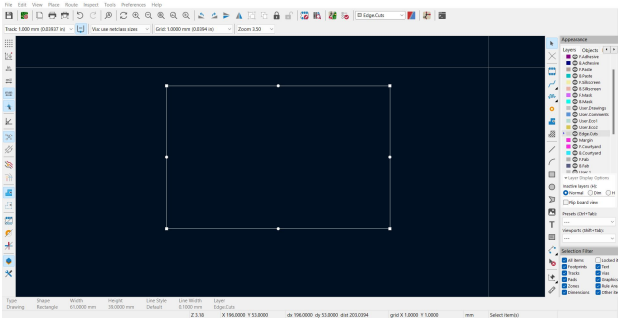

Setting Up Traces and Vias

1. We want to click on the **via size selection list** or the **track size collection list**
   - From there we will click **Edit predefined sizes**

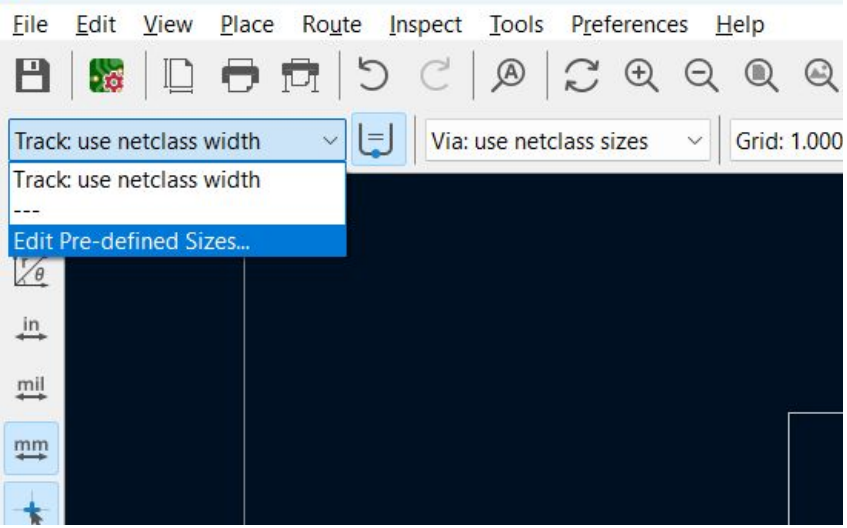

Setting Up Traces and Vias (Cont'd)

2. Press **+** under the Vias table to add a **via size** of **30 mils**
    - We want to make the via **hole 20 mils**
3. We want to add 2 **track sizes**: **30 mils (signal)** and **40 mils (power)**
4. After, press **OK**

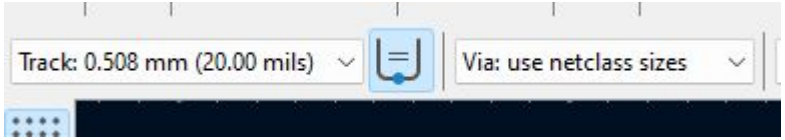

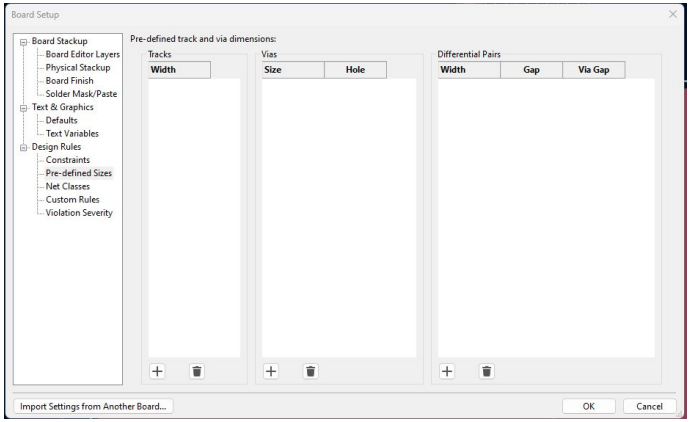

Routing Traces and Vias (Contd)

1. Now we have the track sizes and via sizes set we can start drawing traces. To place a track we need to **select a track size from the drop down menu** mentioned in the slide before:
   a. 40 mils track, 30/20mils Via Size for all **power/ground lines**
   b. 30 mils track, 30/20mils Via Size for all **signal lines**
2. **Deselect** this icon between the track size and via size dropdowns before routing

Adding the Ground Fill

- We have left ground unrouted so we can connect it with a fill
- A **fill** is just a large piece of copper that fills all of the gaps in the design and is connected to whatever nets it is assigned to
  - Fills are utilized to **stabilize the ground**, allow for better **current conduction**, as well as allow for **more heat to be dissipated**
- To add a fill we want to select this icon or use **Ctrl+Shift+Z**, we need to be on the **F/B.Cu** layers

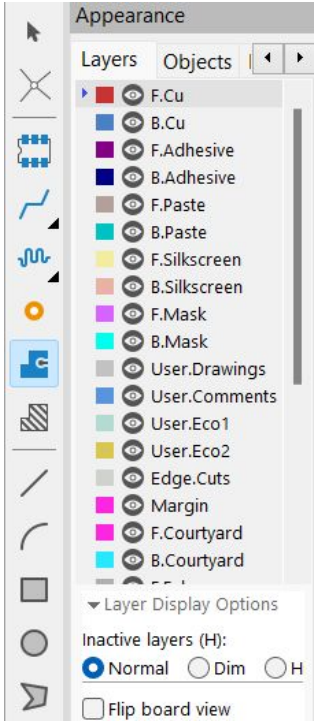

Adding the Ground Fill (Cont'd)

1. Click a point outside of the border, you will get this menu
2. Select the **F.Cu** and **B.Cu** layers
3. Select the **Earth** net as the assigned net
4. Don't touch the rest of the parameters and press **OK**
5. After this, we will move on to drawing the fill

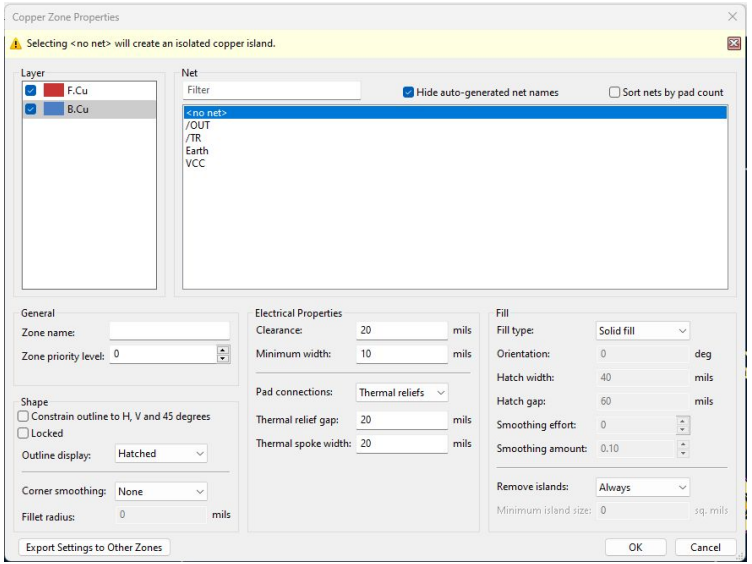

Adding the Ground Fill (Cont'd)

1. Once we have a fill started, draw its border
2. Draw a shape outside of the perimeter enclosing the whole shape/PCB
3. After adding all of the corners of the shape close the shape by connecting all four corners
4. Press **B** to make the fill real

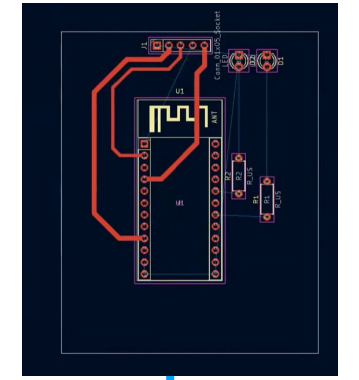

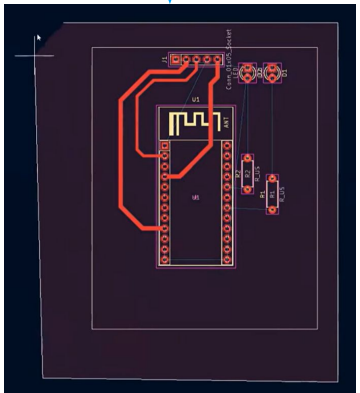

Finishing the PCB

1. Once we have the fill all done there should be no more ratsnest
    - If there are any connections that need to be made, make them
2. Run **DRC** and check if your board has any unresolved errors, then fix them

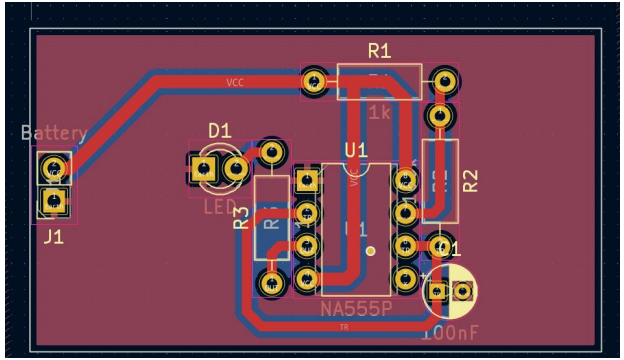

Finishing the PCB (Cont'd)

1. We need to move all of the silkscreen items so that they are easily visible
2. Select the Silkscreen layers and move the text so that it is visible, like this:
3. Optional: Add text or an image on the silkscreen layer to customize your board!

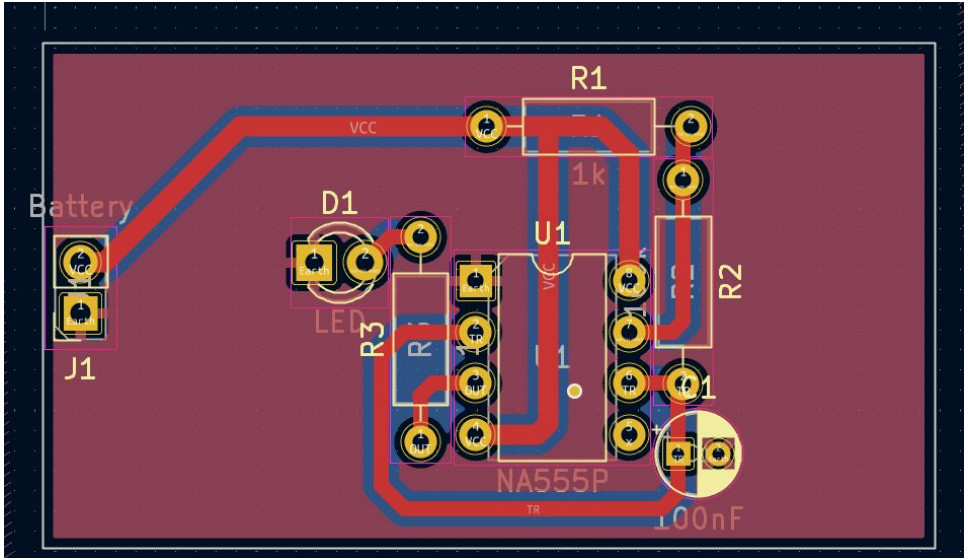

PCB Layout Tips

- **Avoid 90° trace angles**
  - Use 135° angles instead
  - The corners of 90° angles are narrower than the standard trace width; traces should be consistent widths
  - 90 degree are harder to etch as a trace

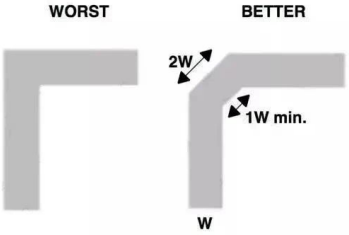

- **Place 1x05 Pin Socket for the Joystick** near the **edge** of the PCB
  - It’s harder to connect the Joystick in the middle of the PCB

FAIR USE DISCLAIMER

Copyright Disclaimer under section 107 of the Copyright Act 1976, allowance is made for “fair use” for purposes such as criticism, comment, news reporting, teaching, scholarship, education and research.

Fair use is a use permitted by copyright statute that might otherwise be infringing.

Non-profit, educational or personal use tips the balance in favor of fair use.

CC BY-NC-SA 4.0

This work by the Institute of Electrical and Electronics Engineers, UC Irvine Branch, is licensed under CC BY-NC-SA 4.0